CRL ADJUSTABLE MIRROR CLIP
6411 MIRROR CLIP SERIES



Important Notice: CRL Adjustable Mirror Clips should be installed into wall studs for maximum support. It is the responsibility of the installer to select the proper screws and anchors when mounting to wall studs is not possible. It is also the responsibility of the installer to determine the safe weight load based on the installation conditions.

Please read entire instructions before installing mirrors with CRL Adjustable Mirror Clips. Please Follow Instructions Carefully.

STEP 1: Location of Mirror

Mark the location of the mirror on the wall.

STEP 2: Bracket Mounting

Set bracket 1/2" (12.7 mm) in from the edge of the mirror, mark bracket holes, drill 3/32" (2 mm) hole, then screw brackets on the wall with the supplied screws.

Square or Rectangular Mirrors with No Bottom Support.

Lower bracket mounting. First fasten upper screw in bracket only, insert clip, and then insert the second screw through the clip and bracket to support the weight. Upper clips can be installed on top or sides to suit taste, leaving top clip adjustable.

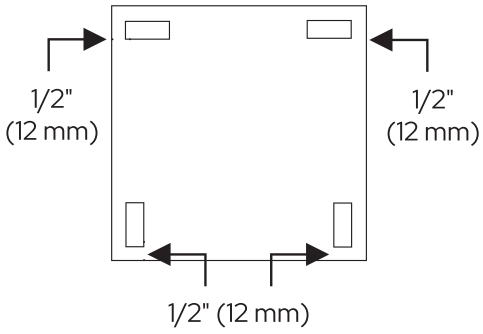

Round or Oval Mirrors with No Bottom Support.

Space the clips evenly, installing the lower clips as illustrated. Use the same installation method as Square or Rectangular Mirror with No Bottom Support.

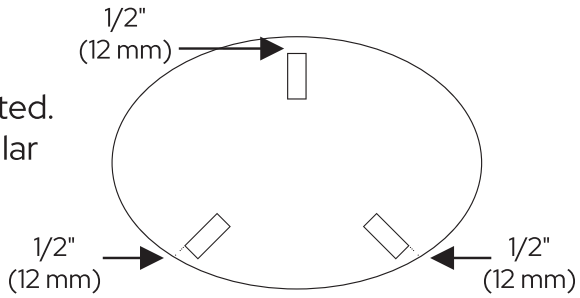

Square or Rectangular Mirrors with Bottom Support.

As the weight is supported at the bottom, two top clips or top side clips are all that is necessary. Space clips according to size of mirror.

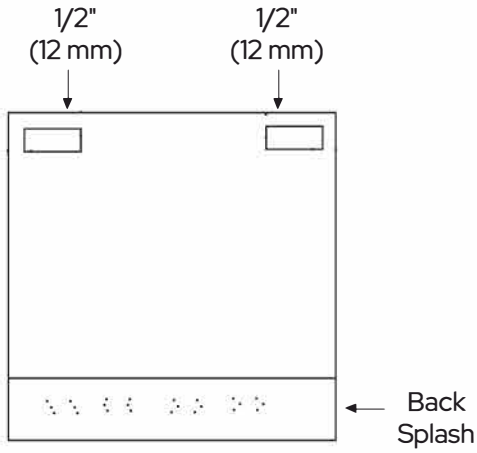

STEP 3: Upper Bracket Mounting

Set bracket 1/2" (12.7 mm) in from the edge of the mirror, mark bracket holes, drill 3/32" (2 mm) hole, then screw brackets on the wall with the supplied screws. Insert clips into the bracket far enough to hold in position.

Important: Glue pads in tips of the clips only to help protect the mirror from contacting the metal surfaces.

STEP 4: Install Mirror

Place mirror in position, push top clips down to secure.
Do not tap or hammer clips into place, as it is not necessary.



Top or Side Mounting Clip (Requires one screw fastener)

Lower Mounting Clip (Requires two screw fasteners)



NOTE: Small slot in the clip allows for added adjustment when using more than two clips to hold weight on an extra large mirror.

CRL Adjustable Mirror clips come in three sizes for most common mirror thicknesses.

- 1/4" (6 mm) for Plate Glass Mirror
- 3/8" (10 mm) for Plate Glass Mirror with a Back Board
- 1/2" (12 mm) for Plate Glass Mirror with a Back Board